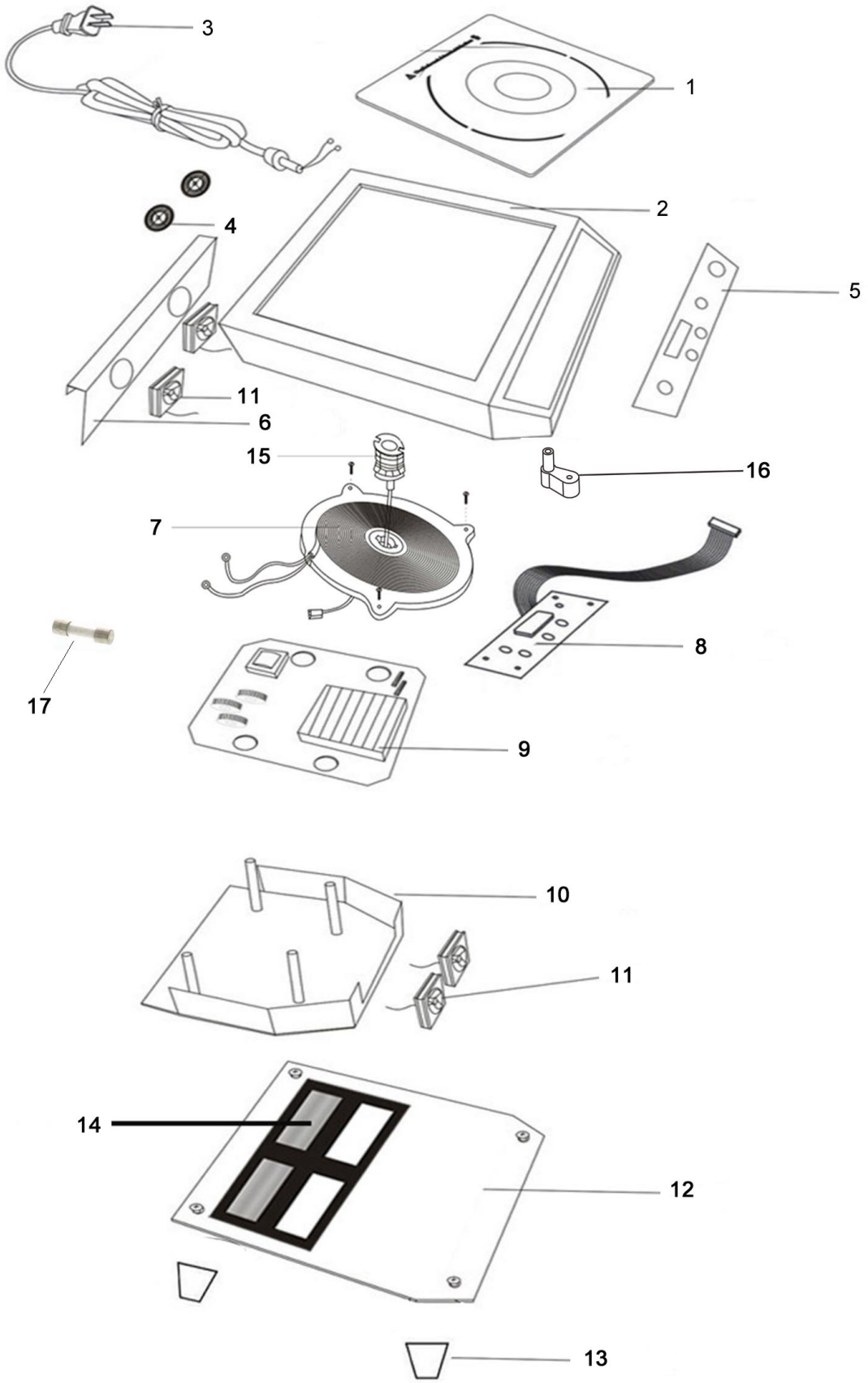
3
1
2
4
5
11
6
15
16
7
8
17
9
10
11
14
12
13

Pos.	Artikelbeschreibung	Description of item	Artikel-Nr./Item No.
1	Glasplatte, Keramik 285 x 285 mm	Glass plate, ceramic 285 x 285 mm	0105835
2	Gehäuse, Edelstahl	Housing, stainless steel	E01058432
3	Anschlusskabel m. Stecker	Power cord w. plug	A039896
4	Abdeckung z. Lüfter	Fan cover	01058354
5	Glasabdeckung f. Bedienfeld	Glass cover f. control panel	E01058435
6	Abdeckung hinten	Back cover	01059352M
7	Heizspule 230V 50Hz 3500W ab Seriennummer 20130100001	Heating coil 230V 50Hz 3500W from serial number 20130100001	010583522
	Heizspule 230V 50Hz 3500W ab 4500019605	Heating coil 230V 50Hz 3500W from 4500019605	E010583527
8	Bedienplatine	Control board	E01058438
9	Platine	Circuit board	n.m.lieferbar/n.m.available
Ersatz:	Hauptplatine	Main board	E010584391
10	Halterung f. Lüfter	Fan holder	01058350
11	Lüfter	Fan	01058355
12	Bodenplatte, Edelstahl	Bottom plate, stainless steel	E010584312
13	Fuß, Gummi	Foot, rubber	01058356
	Fuß, Aluminium	Base, aluminium	01058358
14	Filter	Filter	01059354M
15	Fühler f. Heizspule	Sensor f. heating coil	E010584315
16	Halterung z. Heizspule	Support f. heating coil	E010584317
17	Sicherung 16A	Fuse 16A	E010583516